QUICKPOINT
Exceeding Your Expectations

Layout Sheet for:
QP-205

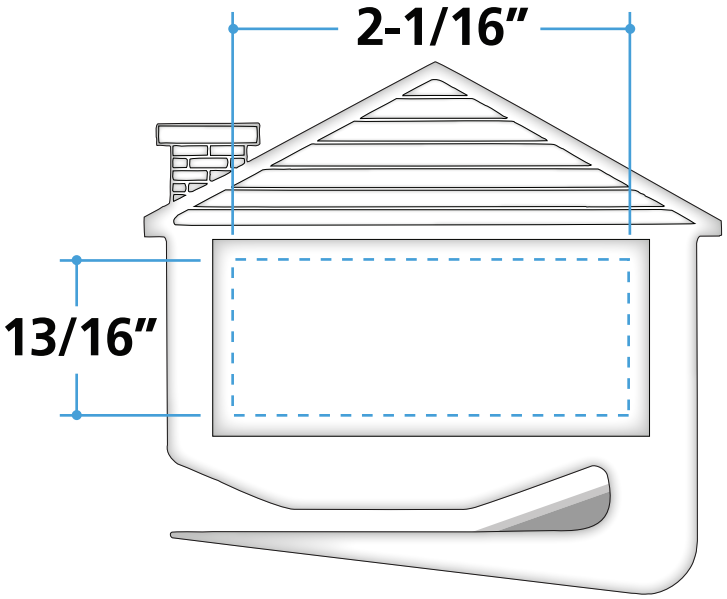

Front

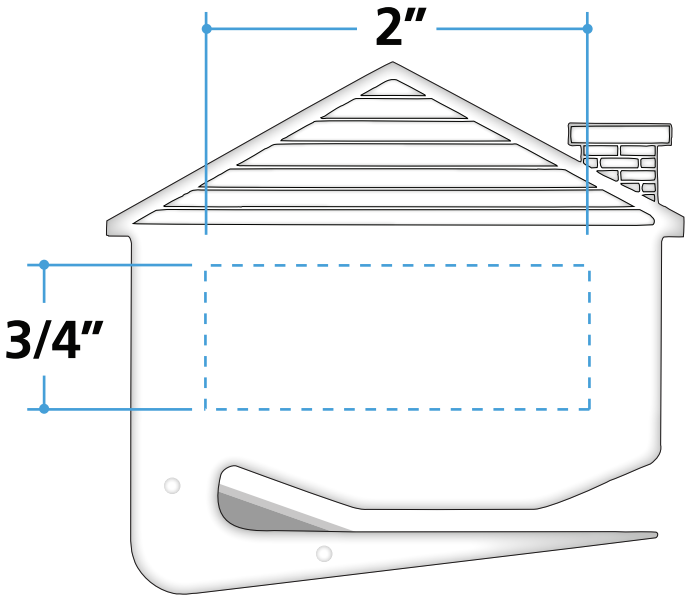

Optional Side