QUICKPOINT
Exceeding Your Expectations
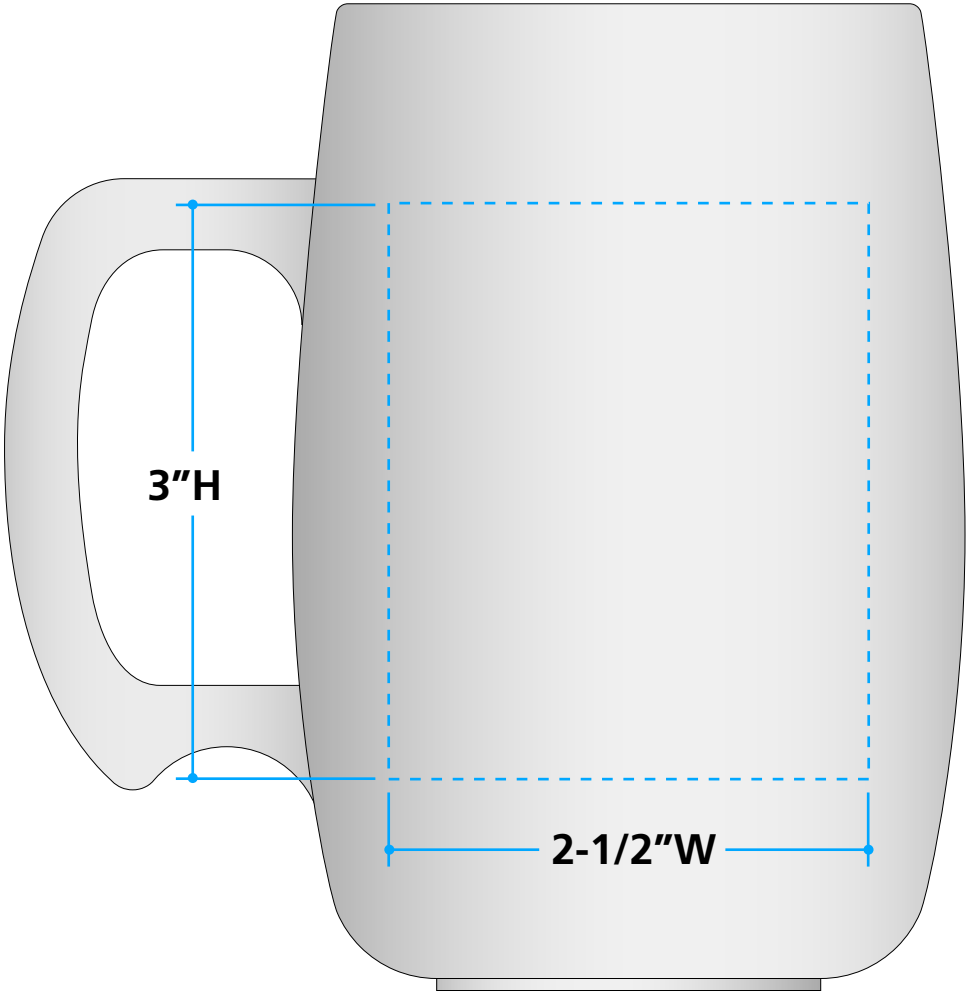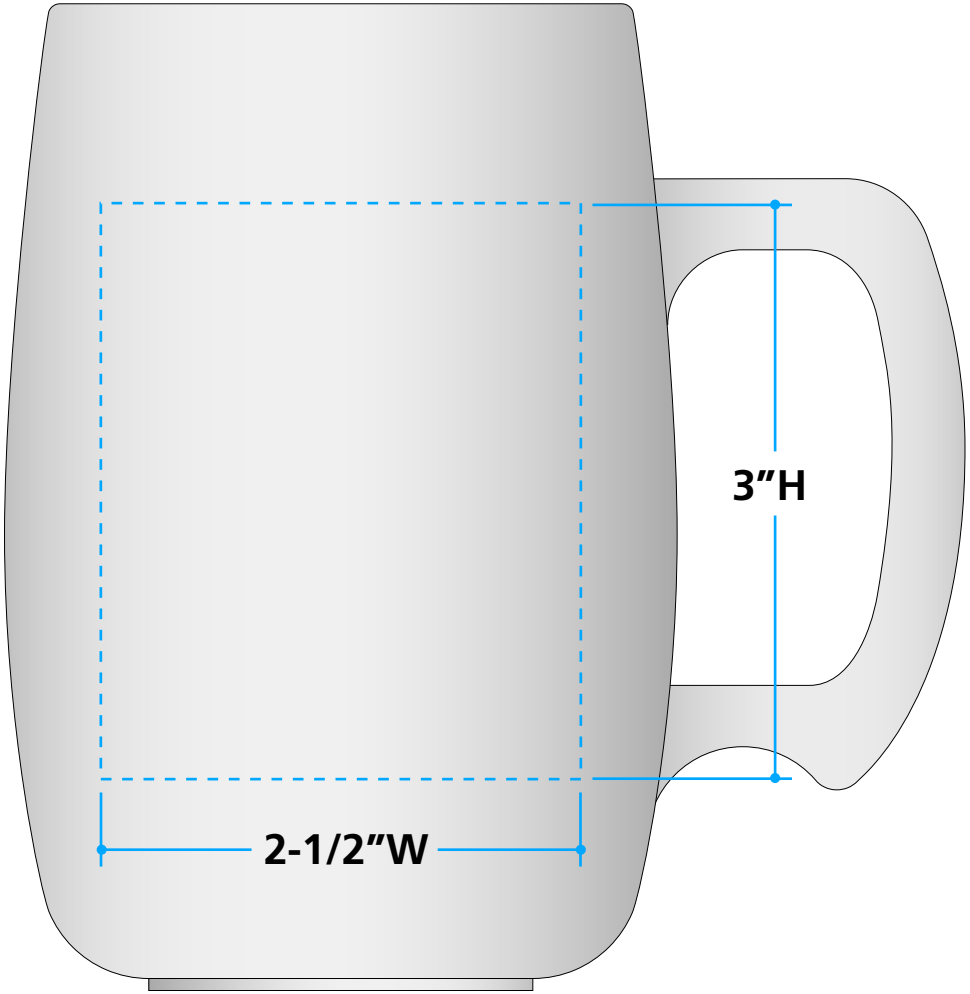
Layout Sheet for: **QP-CP87357**